KEYA®

UNLOCK INNOVATION

TRONIC **PRO**


tronic pro
1
2
3
4
5
6
7
8
9
C
0
KEYA

Shared use mode

1

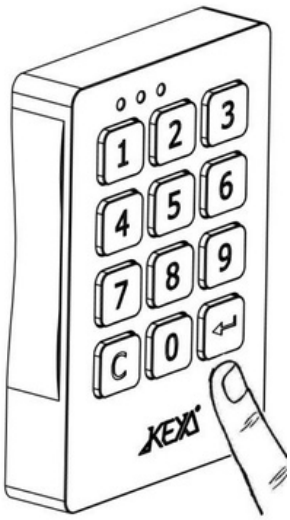

To lock:



To unlock:



Operated with a 4-digit user code. The code is cleared every time the lock is opened, leaving the locker ready for the next user.

Assigned use mode

2

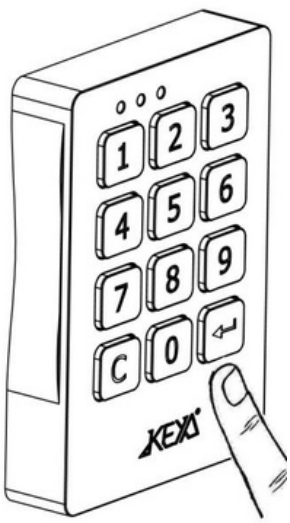

To unlock:



To lock:

Auto-locks after 2 seconds.

Operated with a 4-digit user code, assigned to a single user.

Changingthe user code

3

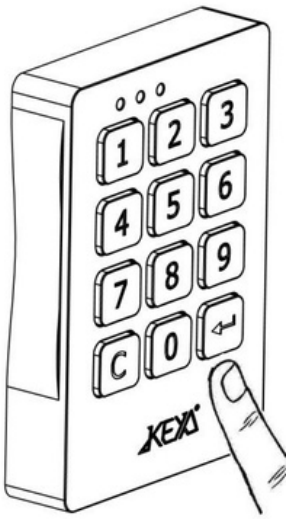

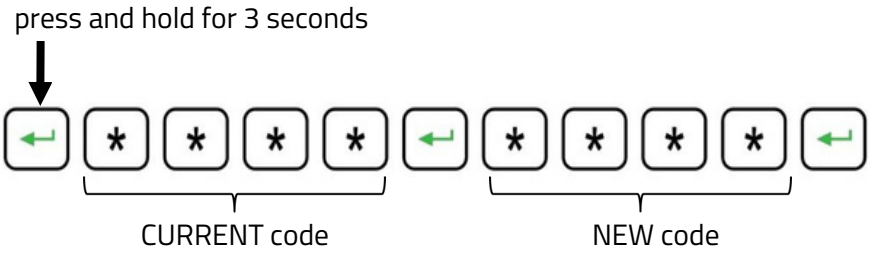

Press and hold Enter for 3 seconds.
Enter the current code and press Enter. Enter the new code and press Enter.

Opening with the Master code: Inspection mode / Clear user code

4

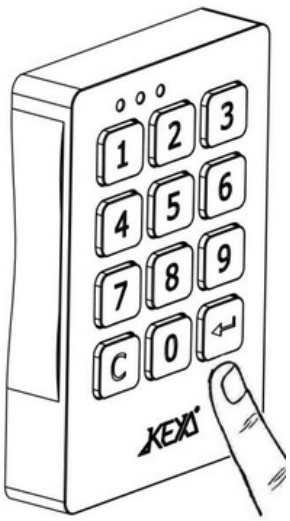

To unlock:

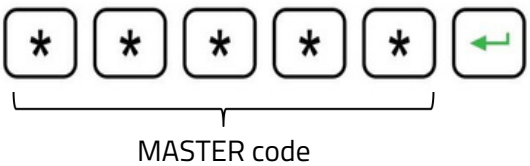

-30s	+30s
INSPECTIO N MODE	USER CODE CLEARED

INSPECTION MODE

Enter the 5-digit Master code and press Enter.
Relock the lock by pressing Enter within 30 seconds.
The user code is retained.

CLEAR USER CODE

Enter the Master code and press Enter.
After 30 seconds the lock remains open and the user code is cleared.
A new user code will be required to lock it again.

Changing the Master code

5

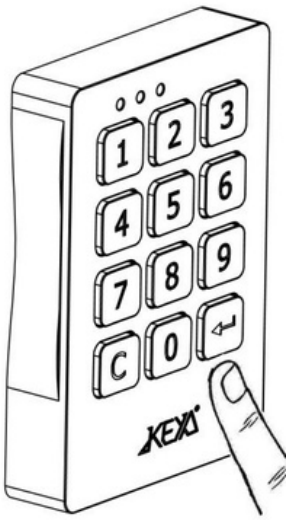

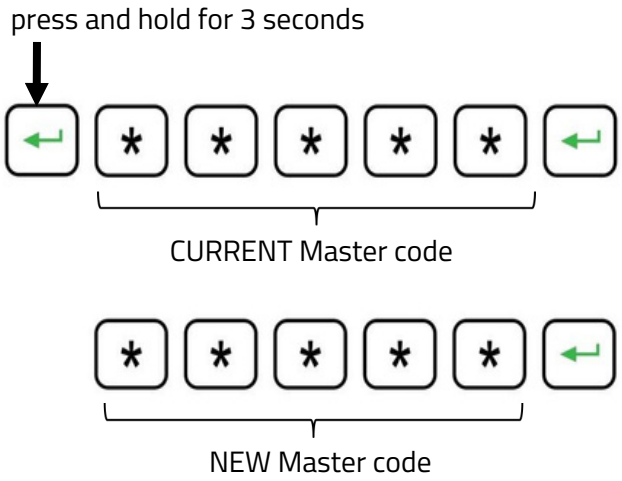

Press and hold Enter for 3 seconds.
Enter the current Master code and press Enter. Enter the new Master code and press Enter.

Opening with the Master electronic key: Inspection mode / Clear user code

6

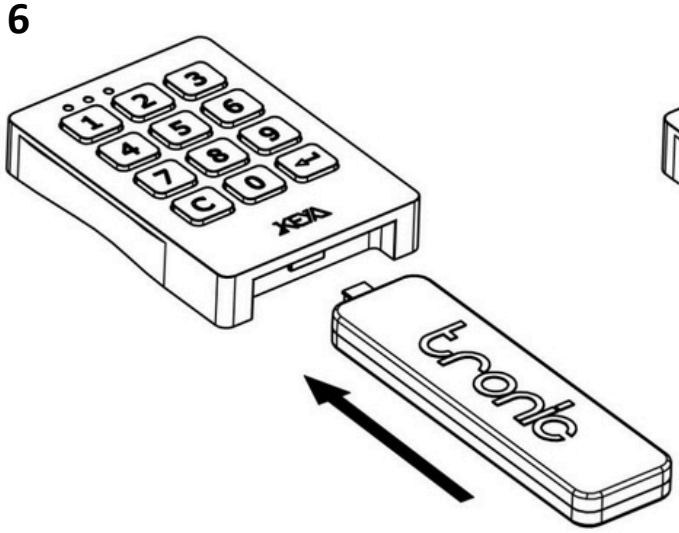

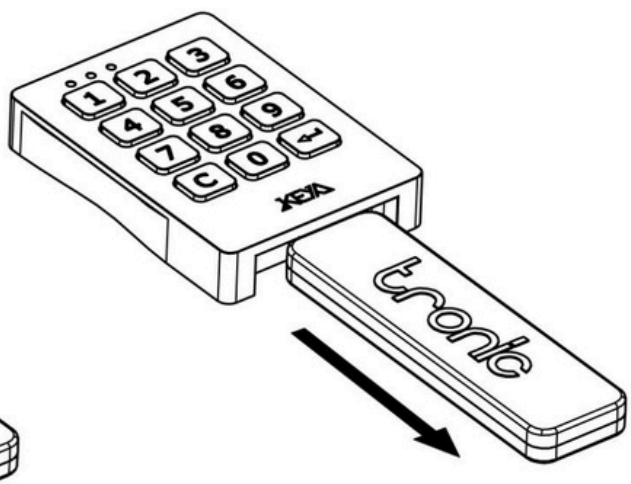

INSPECTION MODE

Connect the Master key (BLUE). The lock opens.
Remove the electronic key.
Press Enter within 30 seconds.
The user code is retained.

CLEAR USER CODE

Connect the Master key (BLUE).
The lock opens.
Remove the electronic key.
After 30 seconds the user code is cleared.
A new code will be required to lock it again.

Programmable settings (management software and cable required)

AUTOMATIC UNLOCK TIME:
The lock opens automatically at the programmed time:
- -hh: mm
- Mon, Tue, Wed, Thu, Fri, Sat, Sun - Working days
- Two options: Leave the door open. Relock the door.

BUZZER VOLUME:
- High/Low/Off

LOCKED STATUS LED:
- Red LED flashing On/Off when locked.

CODES:
- User / Master

AUDIT TRAIL
BATTERY LEVEL
NUMBER OF OPERATIONS

Programming key

7

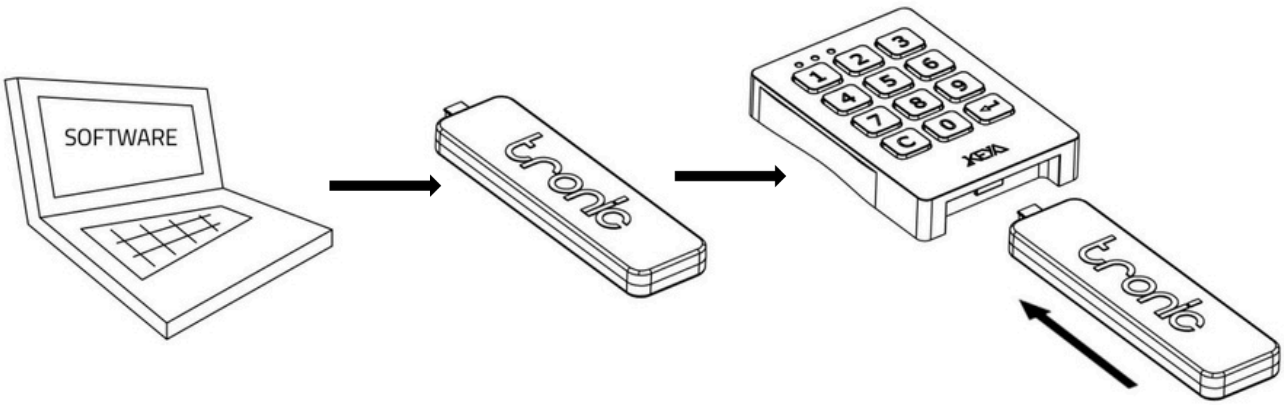

Upload the settings from the PC to the Programming key (BLACK). Connect the Programming key to the lock.
The settings are transferred to the lock automatically.

Battery replacement

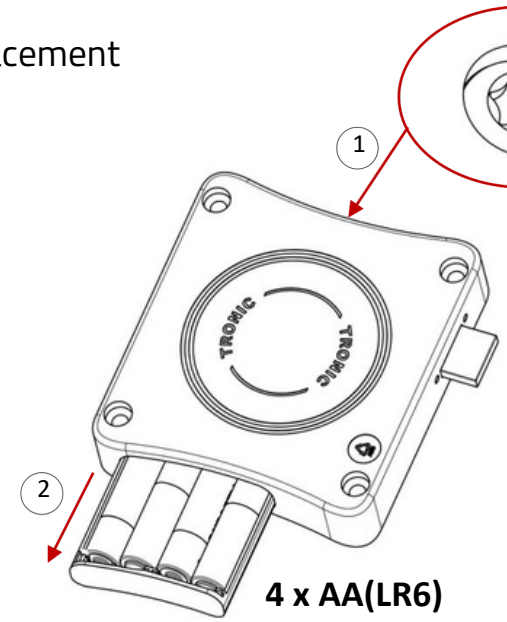

Torx T20

4 x AA(LR6)

IMPORTANT: Batteries must be replaced within 5 minutes, with the BATPACK connected at all times (otherwise the internal clock will lose the time).

Overall dimensions

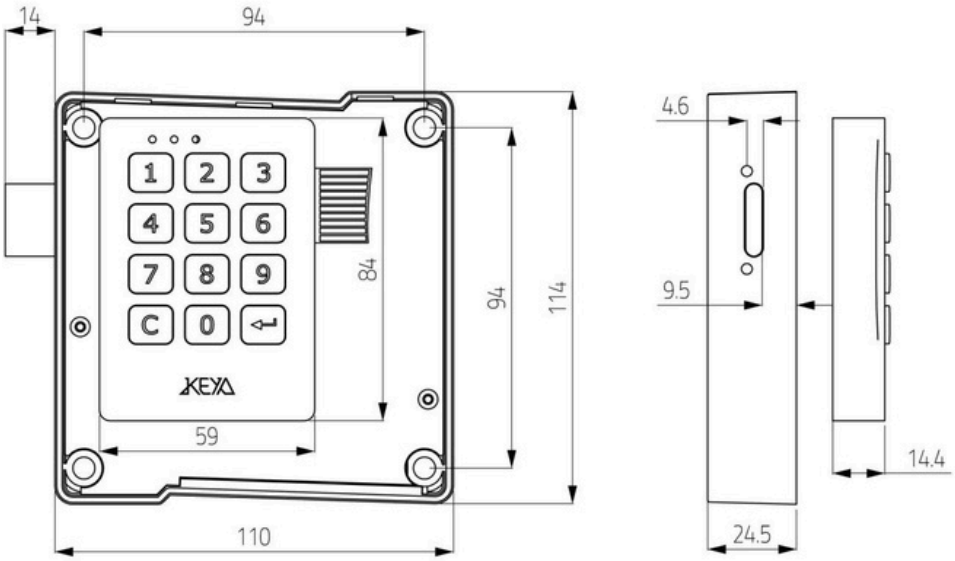

Technical specifications

IPrating(keypad/lock)	---/42
Operating temperature	-5°C < >+70°C
Bolt strength	> 45Kgf
UV resistance	> 10000h
Vibration	10 -200 Hz 2g
Life cycle	> 200,000 cycles
Electrostatic discharge	8000 V
Battery life	90,000 cycles or 3 years

WEEE Directive

RoHS

TÜVRheinland® CERT ISO 9001



775005

ENG – Rev5