KEYA®

UNLOCK INNOVATION

TRONIC **PLUS**


tronic +
1
2
3
4
5
6
7
8
9
C
0
KEYA

Shared use mode

1

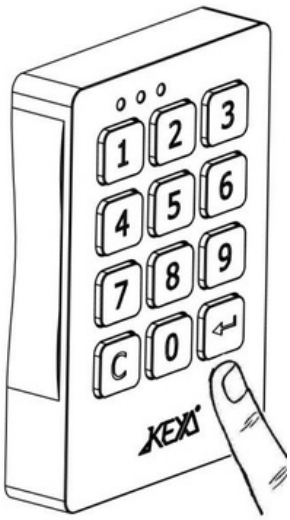

To lock:



To unlock:



Operated with a 4-digit user code. The code is cleared every time the lock is opened, leaving the locker ready for the next user.

Assigned use mode

2

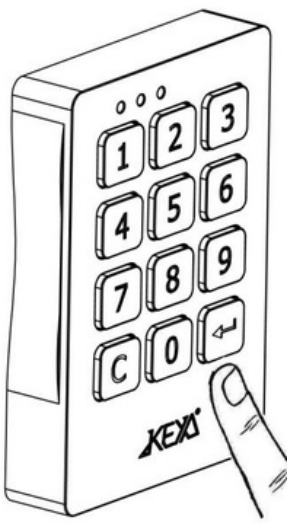

To unlock:



To lock:
Auto-locks after 2 seconds.

Operated with a 4-digit user code, assigned to a single user.

Changing the user code

3

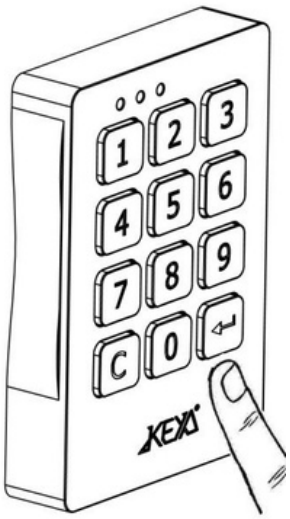

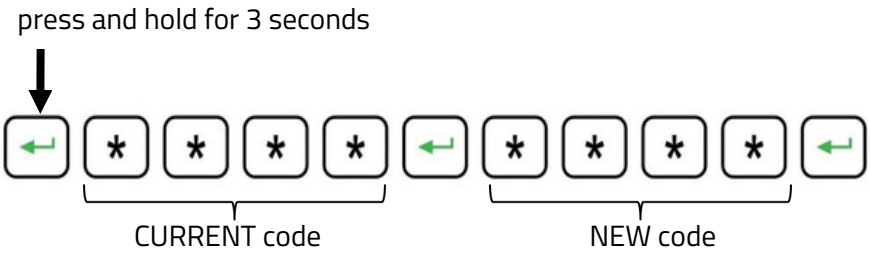

Press and hold Enter for 3 seconds.
Enter the current code and press Enter.
Enter the new code and press Enter.

Opening with the Master code: Inspection mode / Clear user code

4

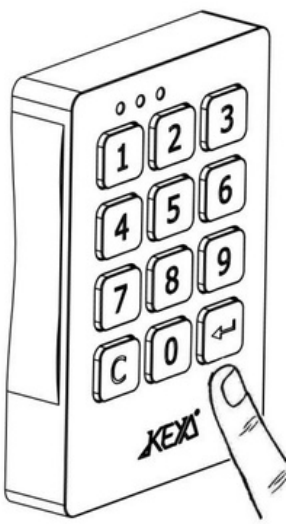

To unlock:

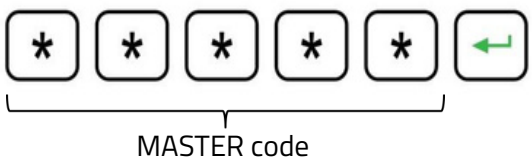

-30s	+30s
INSPECTION MODE	USER CODE CLEARED

INSPECTION MODE

Enter the 5-digit Master code
and press Enter.
Relock the lock by pressing Enter within
30 seconds.
The user code is retained.

CLEAR USER CODE

Enter the Master code and press Enter.
After 30 seconds the lock remains open
and the user code is cleared.
A new user code will be required to lock
it again.

Changing the Master code

5

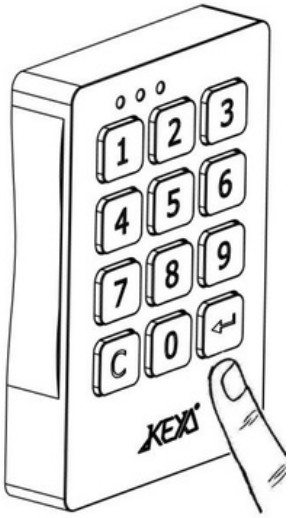

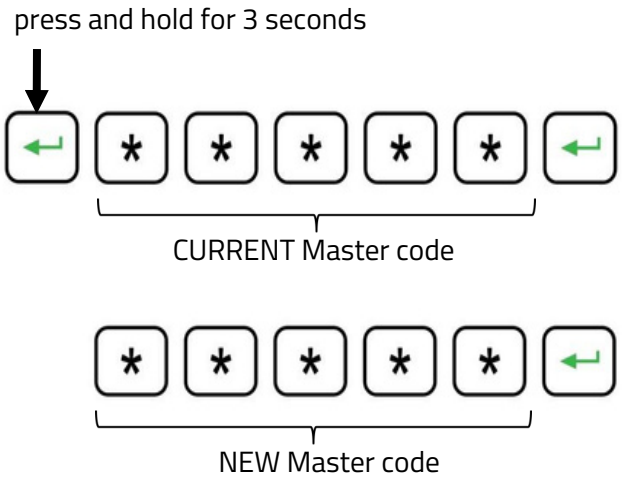

Press and hold Enter for 3 seconds.
Enter the current Master code and press Enter.
Enter the new Master code and press Enter.

Battery replacement

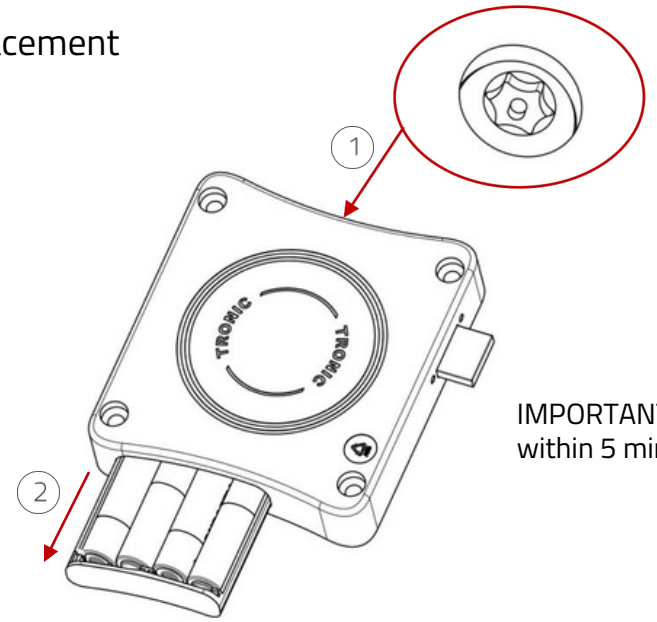

IMPORTANT: Batteries must be replaced within 5 minutes

Overall dimensions

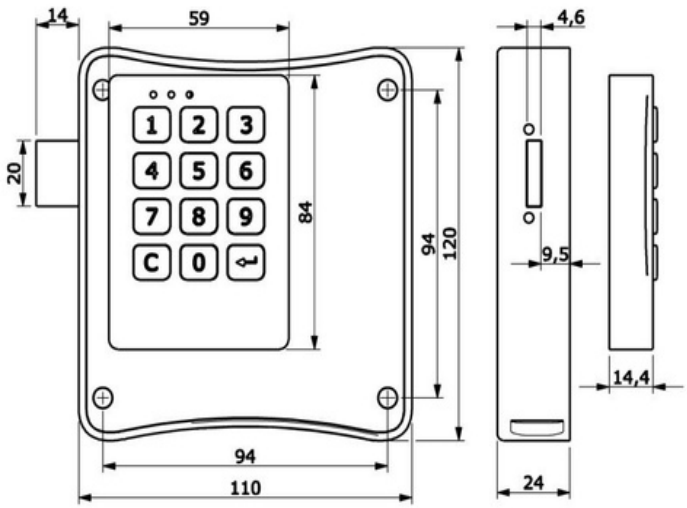

Technical specifications

Salt spray test	>96H
Operating	-5° C <> + 70° C
temperature Bolt	>45Kgf
strength	> 10000h
UV resistance	10 - 200 Hz 2g
Vibration	> 200,000 cycles
Life cycle	8000 V
Electrostatic discharge	> 30,000 cycles
Battery life	or 3 years

WEEE Directive

RoHS

TÜVRheinland® CERT ISO 9001


100% recycled