


ELOCK


1 2
3 4
5 6
7 8
9 0
KEYA

## Shared use mode

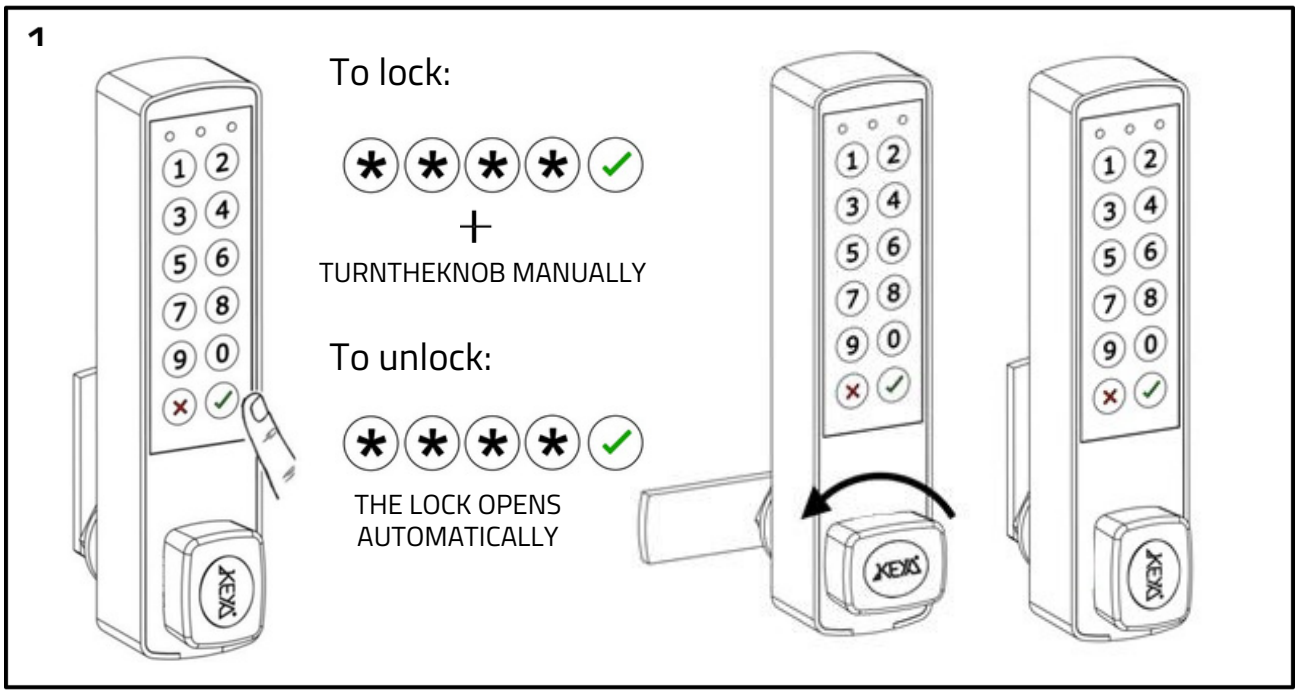


Operated with a 4-digit user code. The code is cleared every time the lock is opened, leaving the locker ready for the next user.

## Assigned use mode

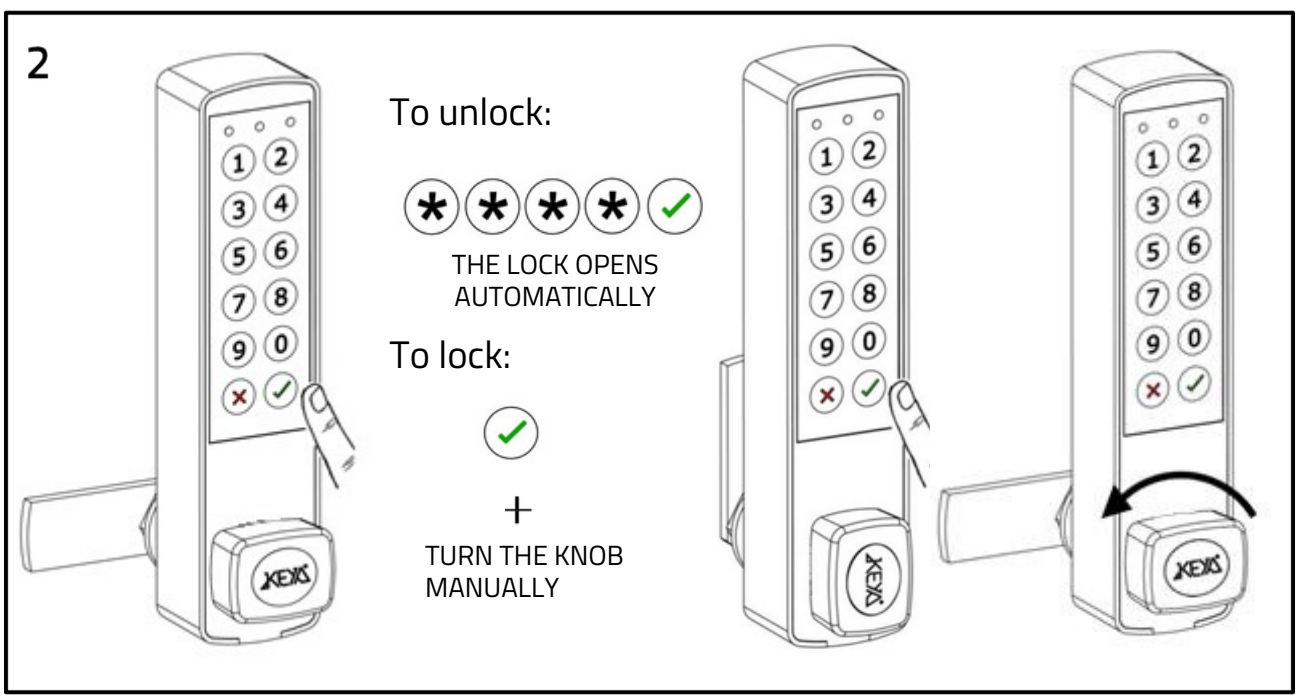


Operated with a 4-digit user code, assigned to a single user.

## Changing the user code

**3**



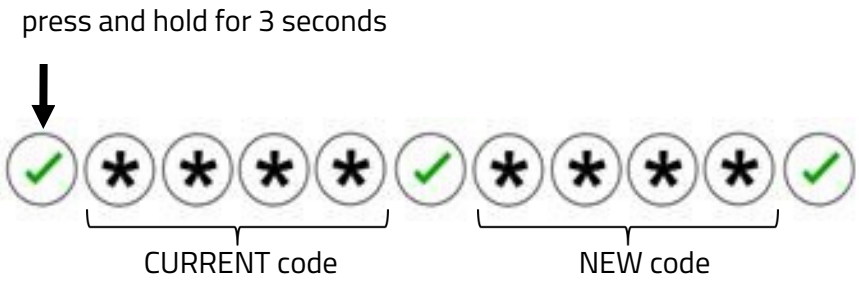


Press and hold Enter for 3 seconds.
Enter the current code and press Enter.
Enter the new code and press Enter.

## Opening with the Master code: Inspection mode / Clear user code

**4**



To unlock:

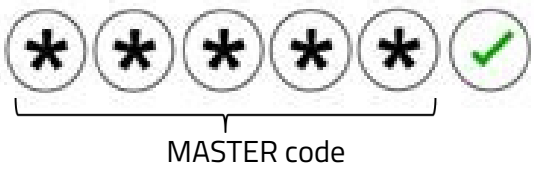


| -30s | +30s |
|---|---|
| INSPECTION MODE | USER CODE CLEARED |

**INSPECTION MODE**

Enter the 5-digit Master code
and press Enter.
Relock the lock by pressing Enter within
30 seconds.
The user code is retained.

**CLEAR USER CODE**

Enter the Master code and press Enter.
After 30 seconds the lock remains open
and the user code is cleared.
A new user code will be required to lock
it again.

## Changing the Master code

5

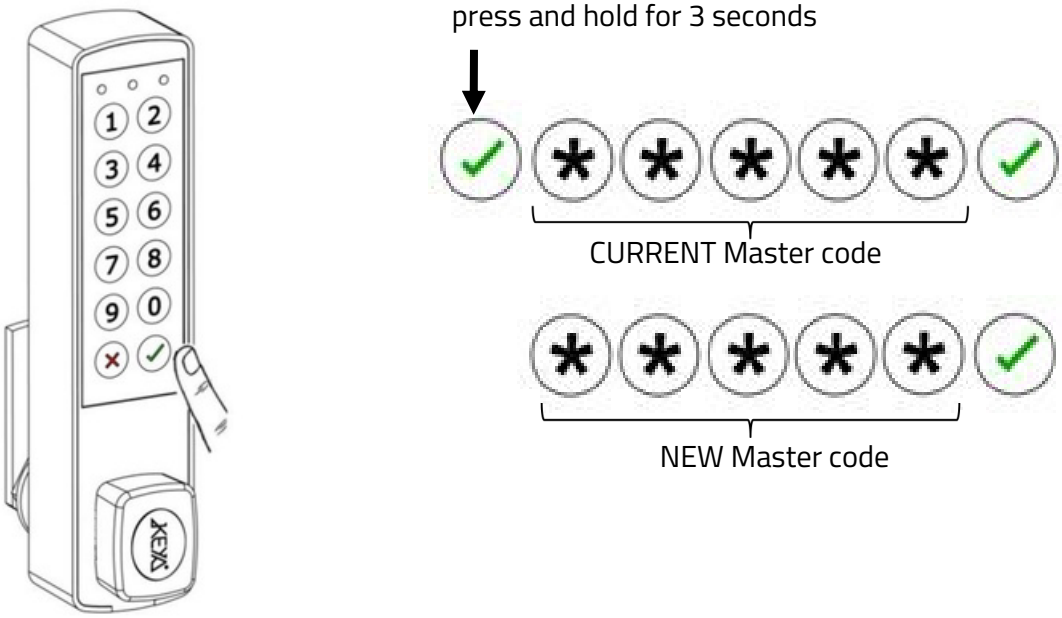


Press and hold Enter for 3 seconds.
Enter the current Master code and press Enter.
Enter the new Master code and press Enter.

## OpeningwiththeMasterelectronickey: Inspection mode / Clear user code

6

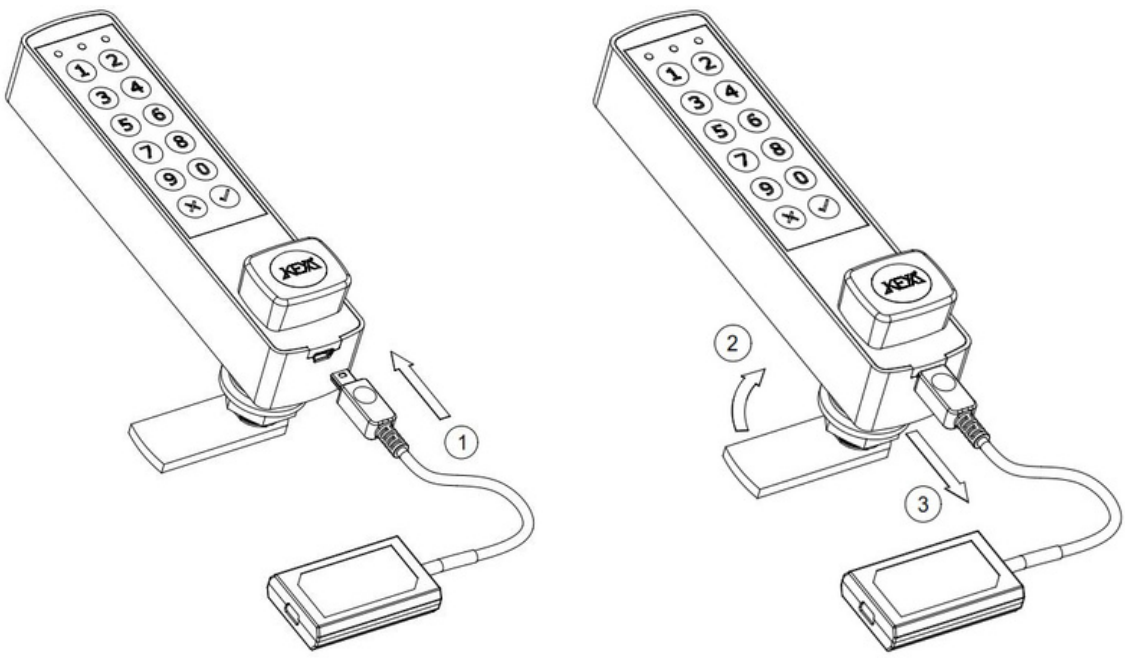


INSPECTION MODE
Connect the Master key (BLUE).
The lock opens.
Remove the electronic key.
Press Enter within 5 seconds.
The user code is retained.

CLEAR USER CODE
Connect the Master key (BLUE).
The lock opens.
Remove the electronic key.
After 5 seconds the user code
is cleared.
A new code will be required to lock
it again.

## Programmable settings (management software and cable required)

AUTOMATIC UNLOCK TIME:
The lock opens automatically at the programmed time:

- hh : mm
- Mon, Tue, Wed, Thu, Fri, Sat, Sun
- Working days
- Two options: Leave the door open.
  Relock the door.

BUZZER VOLUME:

- High / Low / Off

LOCKED STATUS LED:

- Red LED flashing On / Off when locked.

CODES:

- User / Master

AUDIT TRAIL
BATTERY LEVEL
NUMBER OF OPERATIONS

## Programming key

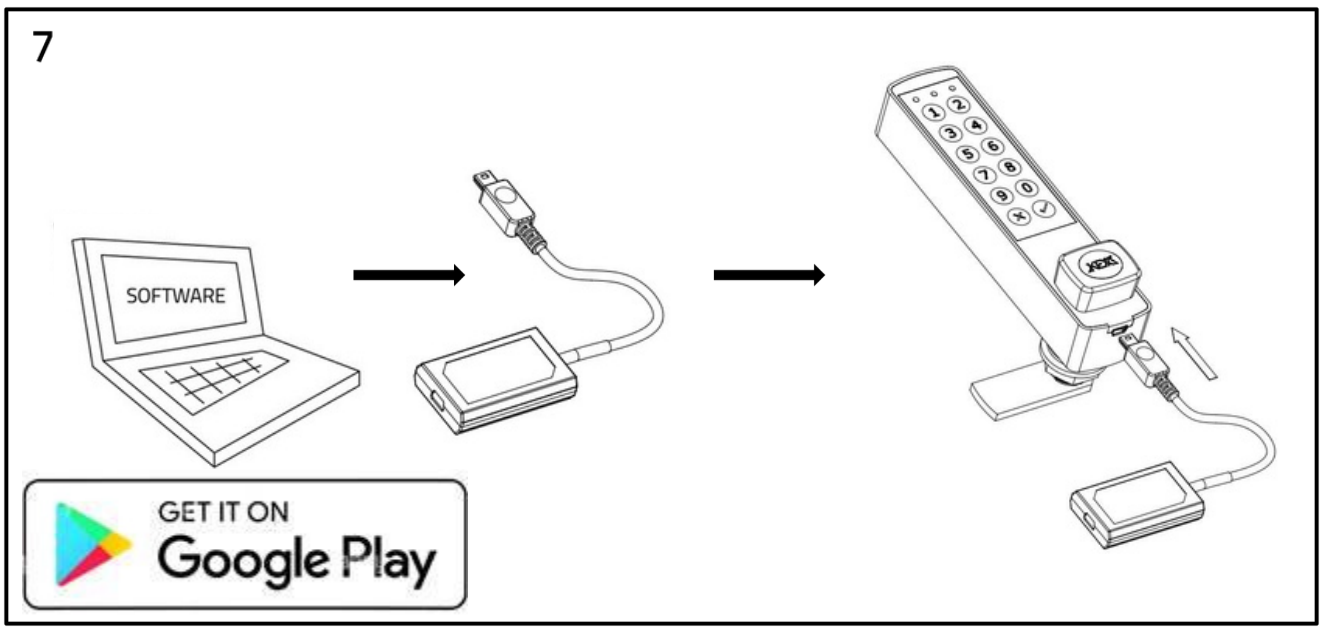


Upload the settings from the PC to the Programming key (BLACK).
Connect the Programming key to the lock.
The settings are transferred to the lock automatically.

## Overall dimensions

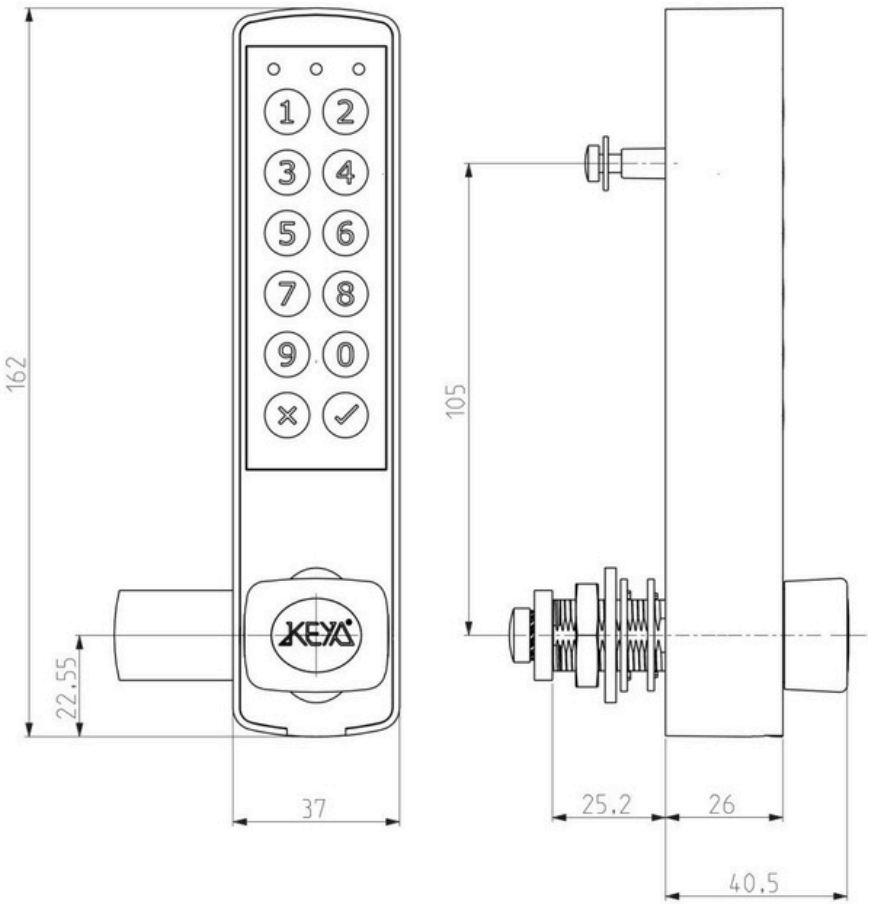


## Technical specifications

| | |
|---|---|
| Salt spray test | > 96h |
| Operating temperature | -5 ° C < > +70 ° C |
| Bolt strength | > 45Kgf |
| UV resistance | > 10000h |
| Vibration | 10 - 200 Hz 2g |
| Life cycle | > 200,000 cycles |
| Electrostatic discharge | 8000 V |
| Battery life | > 35,000 cycles or 3 years |

IMPORTANT: Batteries must be replaced within 5 minutes, with the BATPACK connected at all times (otherwise the internal clock will lose the time).




775001

ENG Rev5